Example 109

Function-description: Boiler (1-step + modulation), mixed Heating system 1 (3-point), mixed Heating system 2 (3-point)

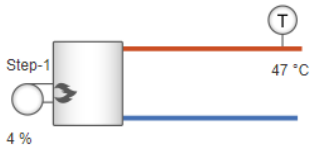

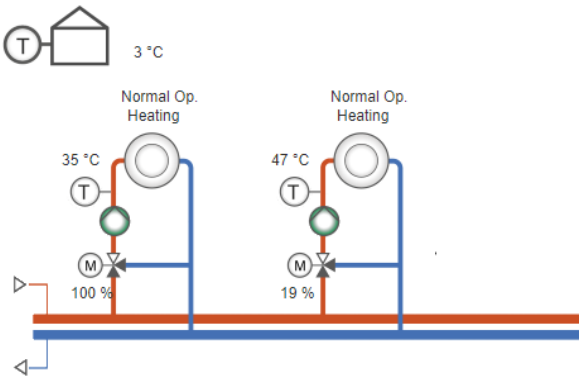

Outdoor temperature	AI1		N	
HS1 supply temp.	AI2		L	
HS2 supply temp.	AI3		C7	
	AI4		DO7	Boiler 1 step 1
	UI1			
Boiler supply temp	UI2		DO6	HS2 Valve close
	UI3		C5-6	
	UI4		DO5	HS2 Valve increase
	DI1			
	DI2		DO4	HS1 Valve decrease
	AO1		C3-4	
Boiler 1 modulation	AO2		DO3	HS1 Valve increase
	Agnd			
	AO3		DO2	HS2 Pump A
	M-B		C1-2	
	M-A		DO1	HS1 Pump A

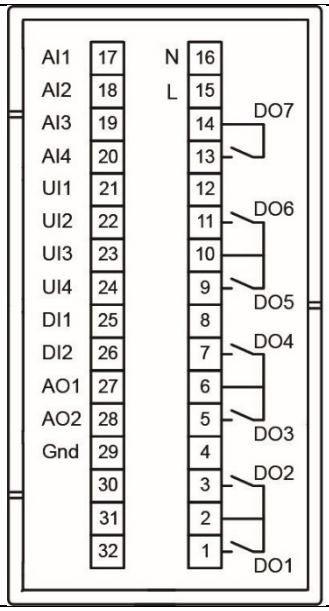

Terminal connection

Available for: HCV191DW-2, HCV192DW-2, HCV203DWM-2

Application tool - file : 109_HCVxxxxx_Hbmo_HS3p_HS3p